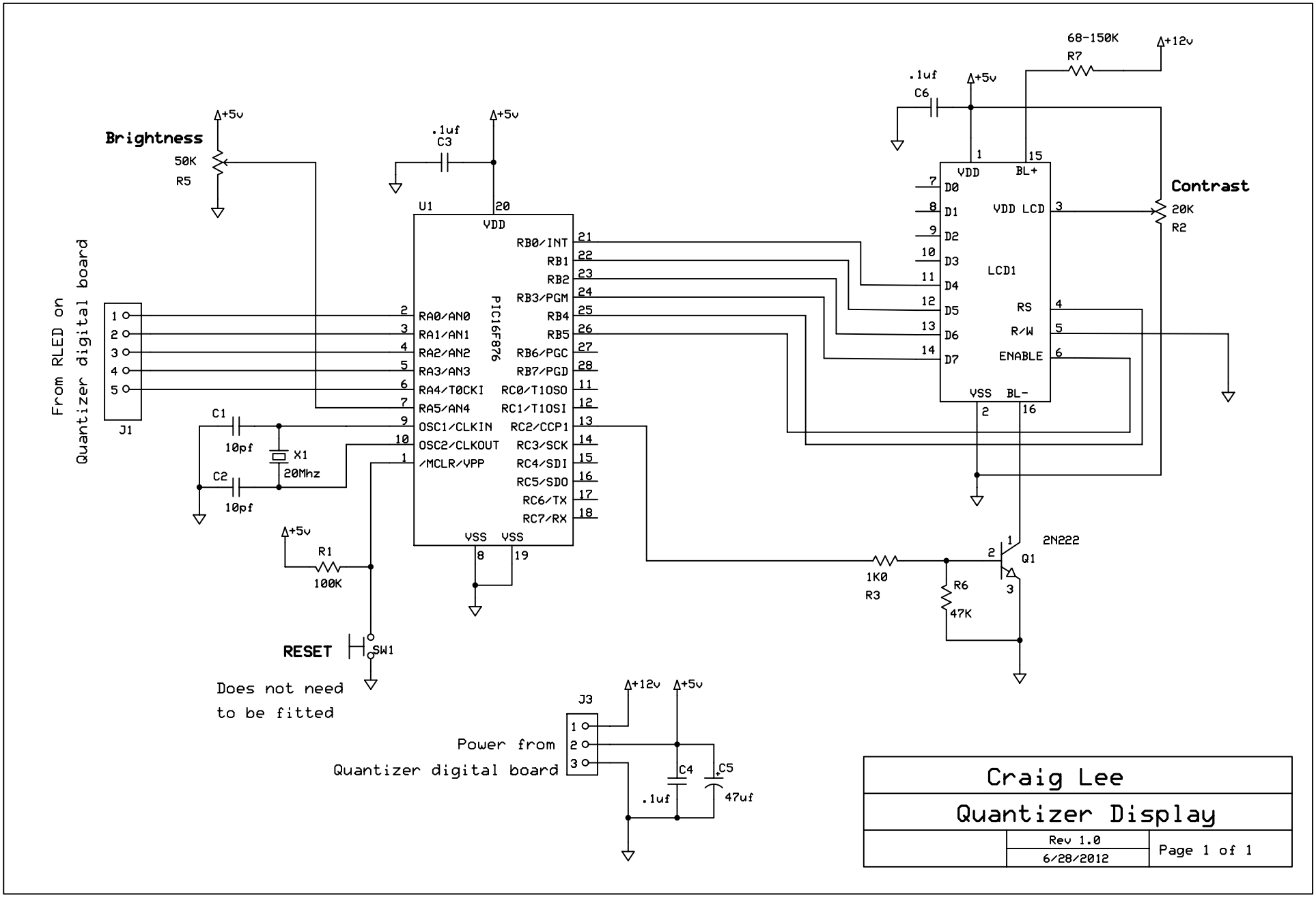

Craig Lee		
Quantizer Display		
	Rev 1.0 6/28/2012	Page 1 of 1